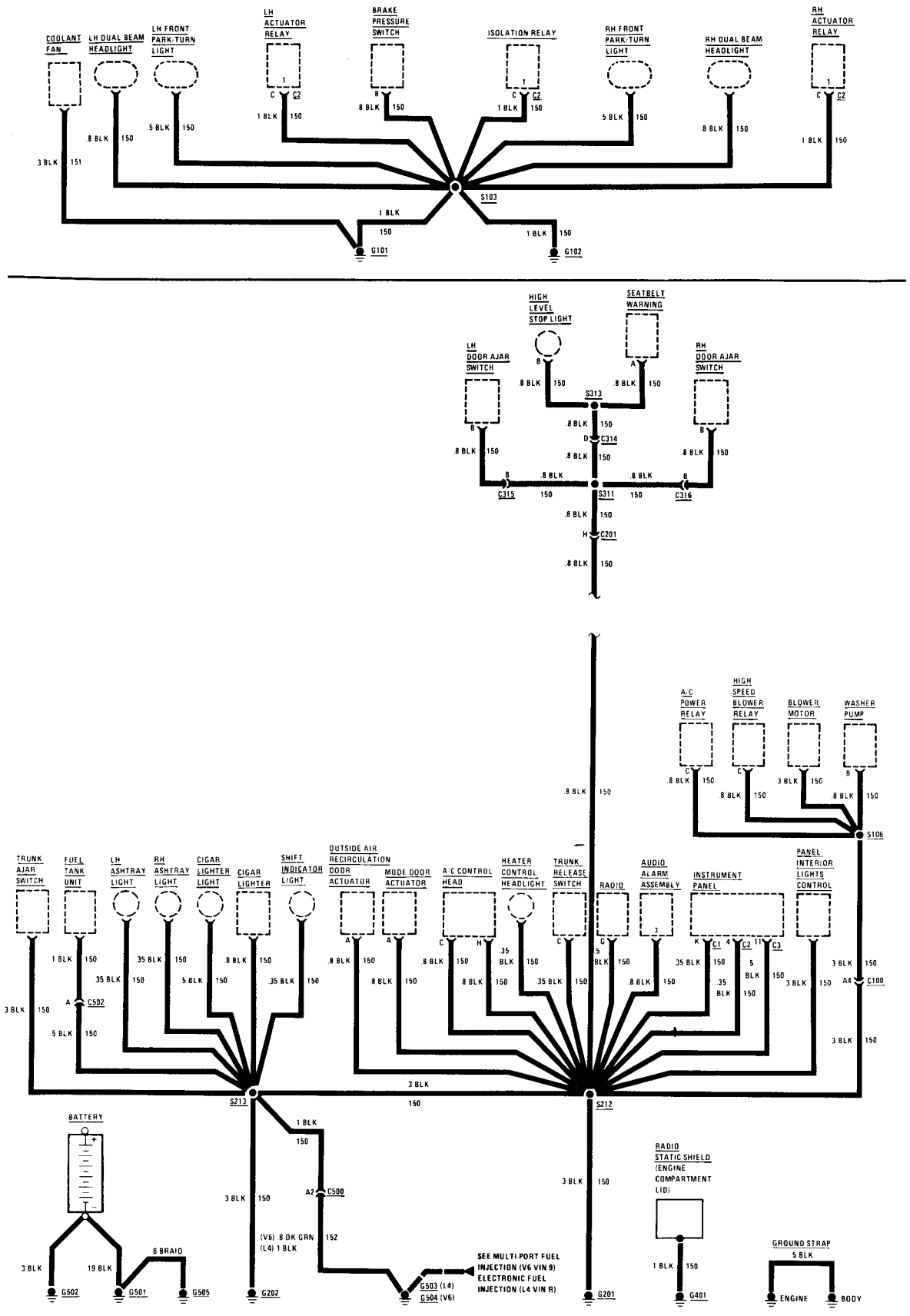

Ground distribution — instrument panel and front lights