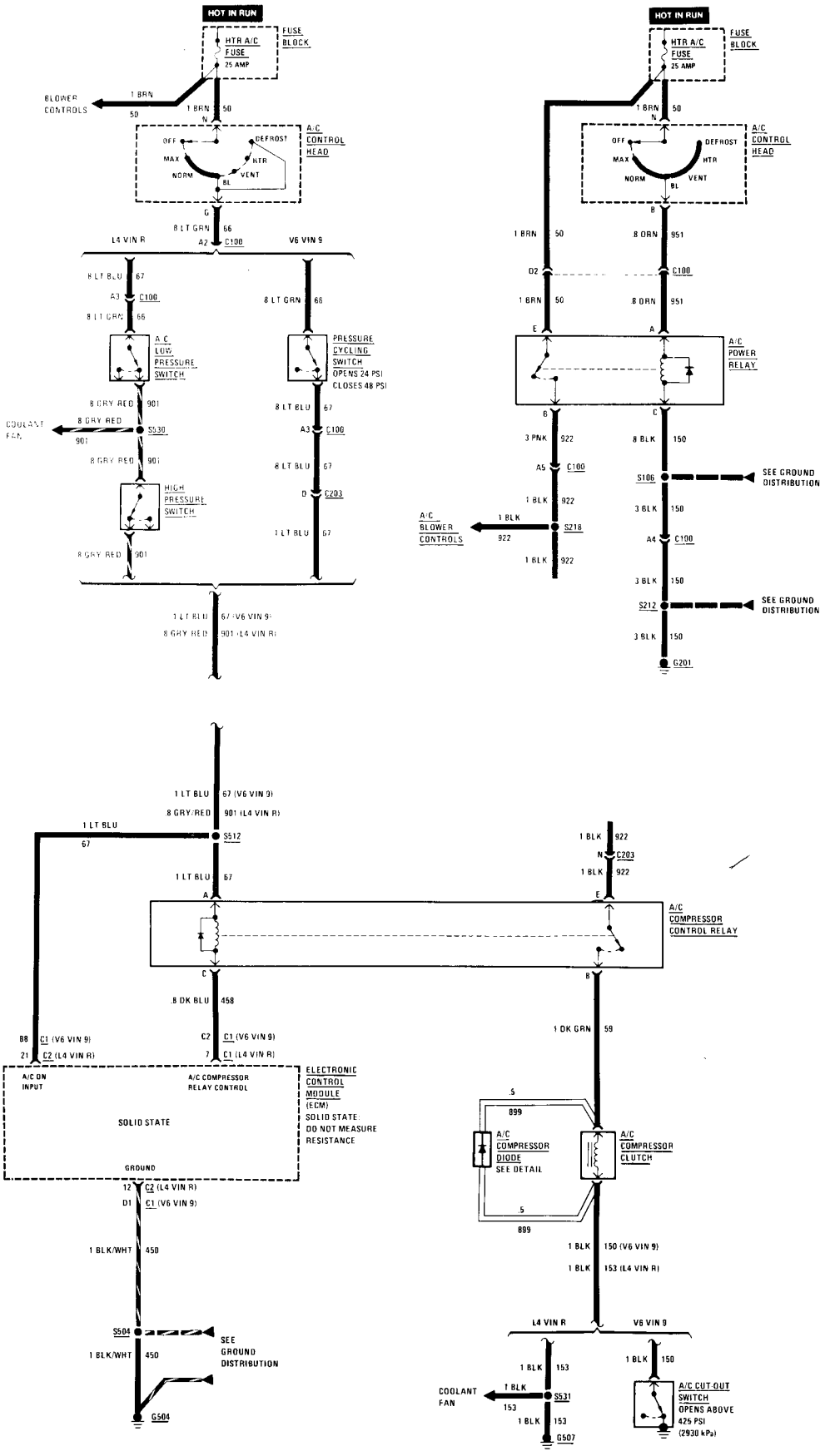

Air conditioning system — compressor controls